91X

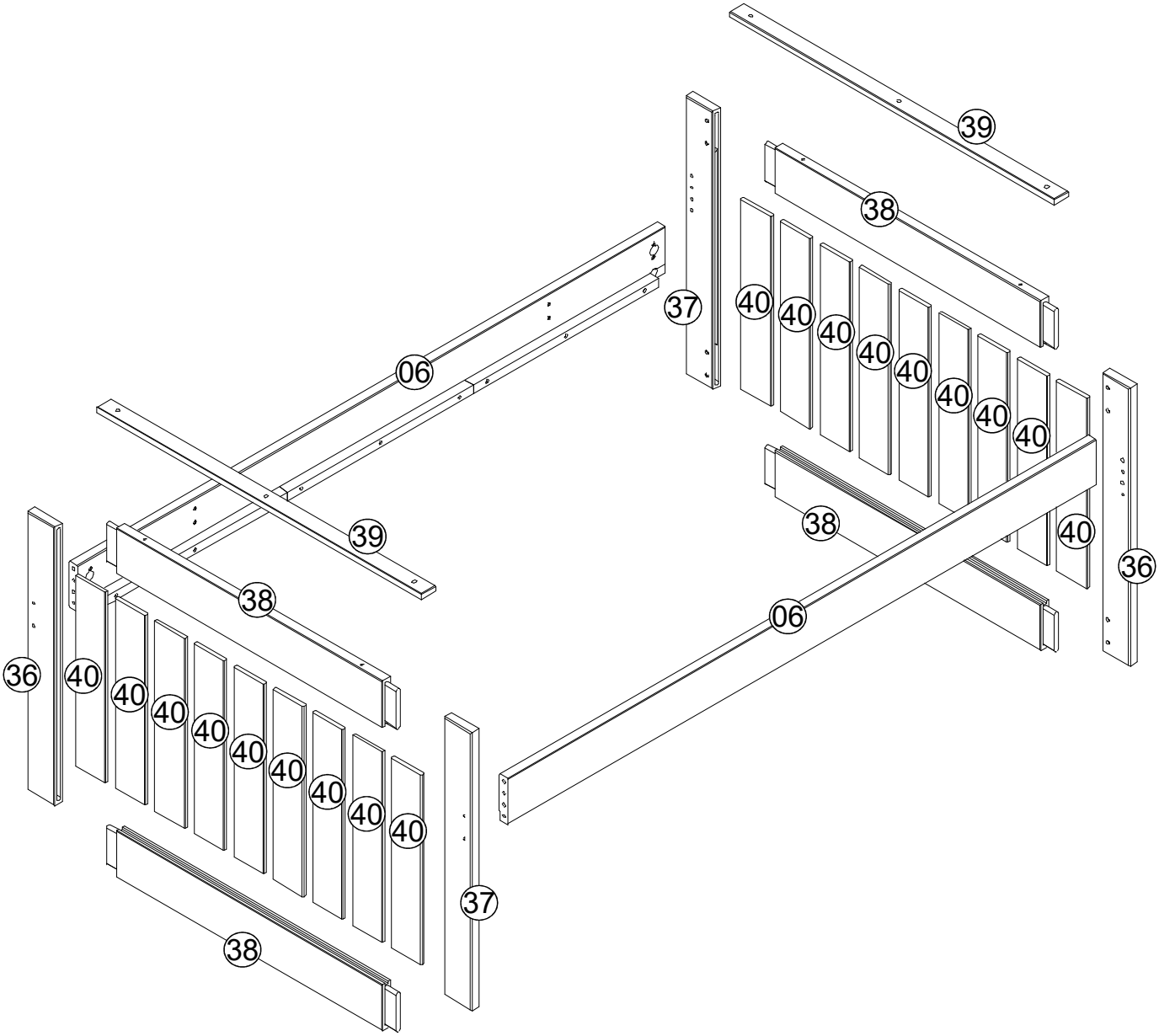
39
38
37
40
40
40
40
40
40
40
40
06
39
38
40
36
38
06
36
40
40
40
40
40
40
40
40
40
37
38

91X		90 min	P3	

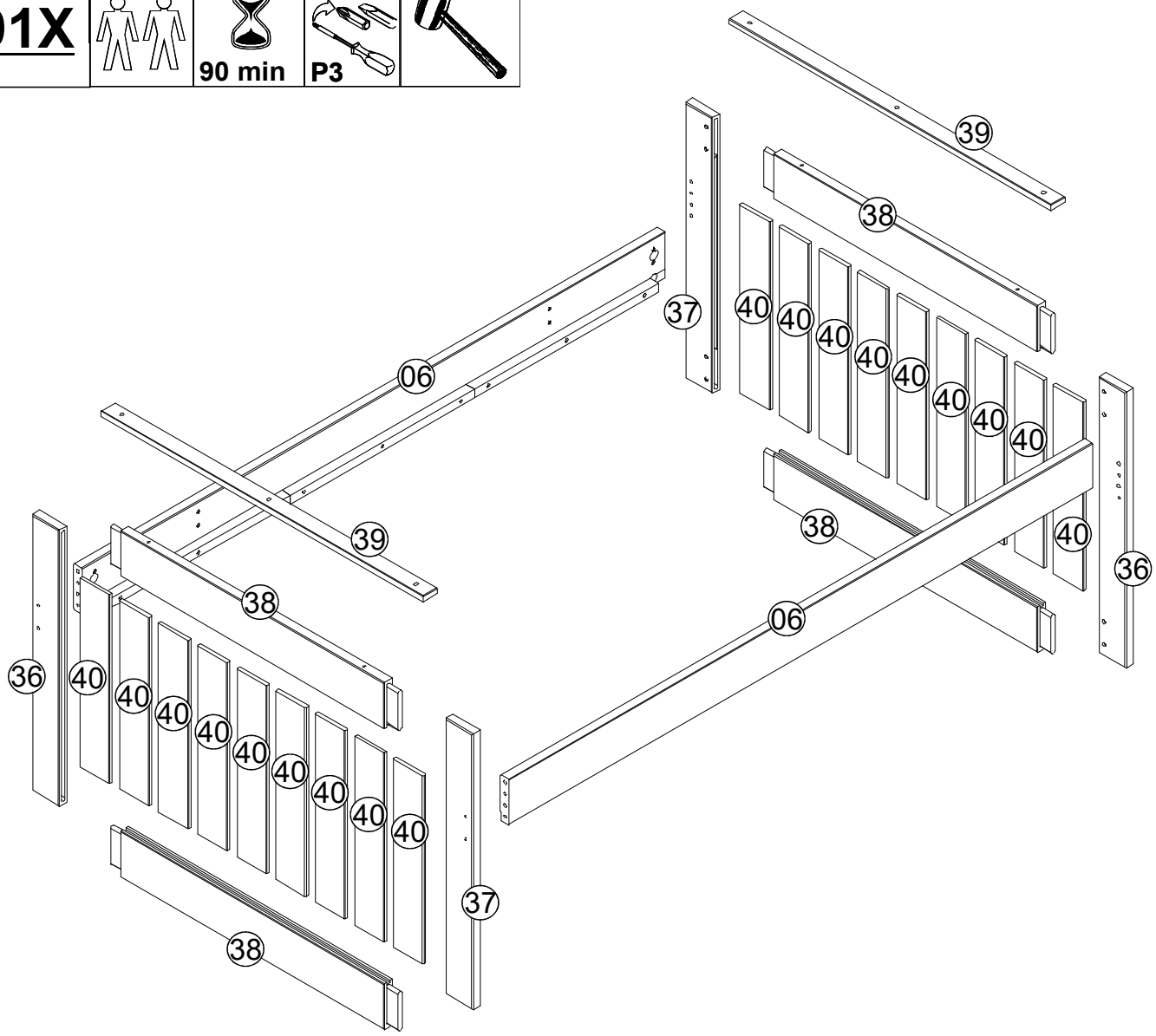

PARTS LIST 91X

A	BLACK 4,5X20	16	F	35mm Ø4,5 P3 GOLD	06
B	10X40	08	G	08X30	04
C	BLACK 1/4X70	08	H	HOLE COVER	06
D	SILVER	08	I	10x50	04
E	SILVER	01			

01

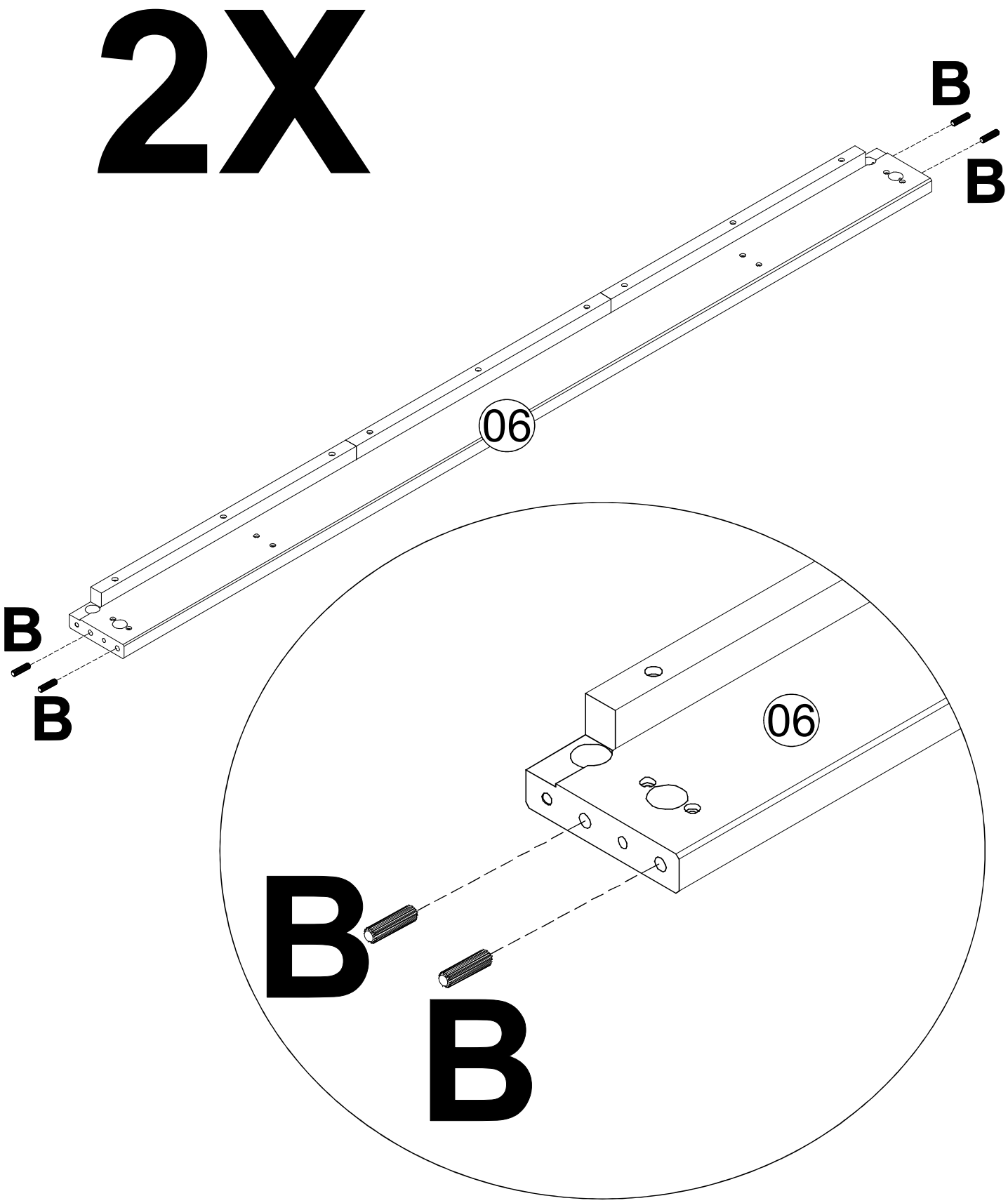

B	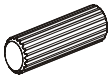 10x40	08

02

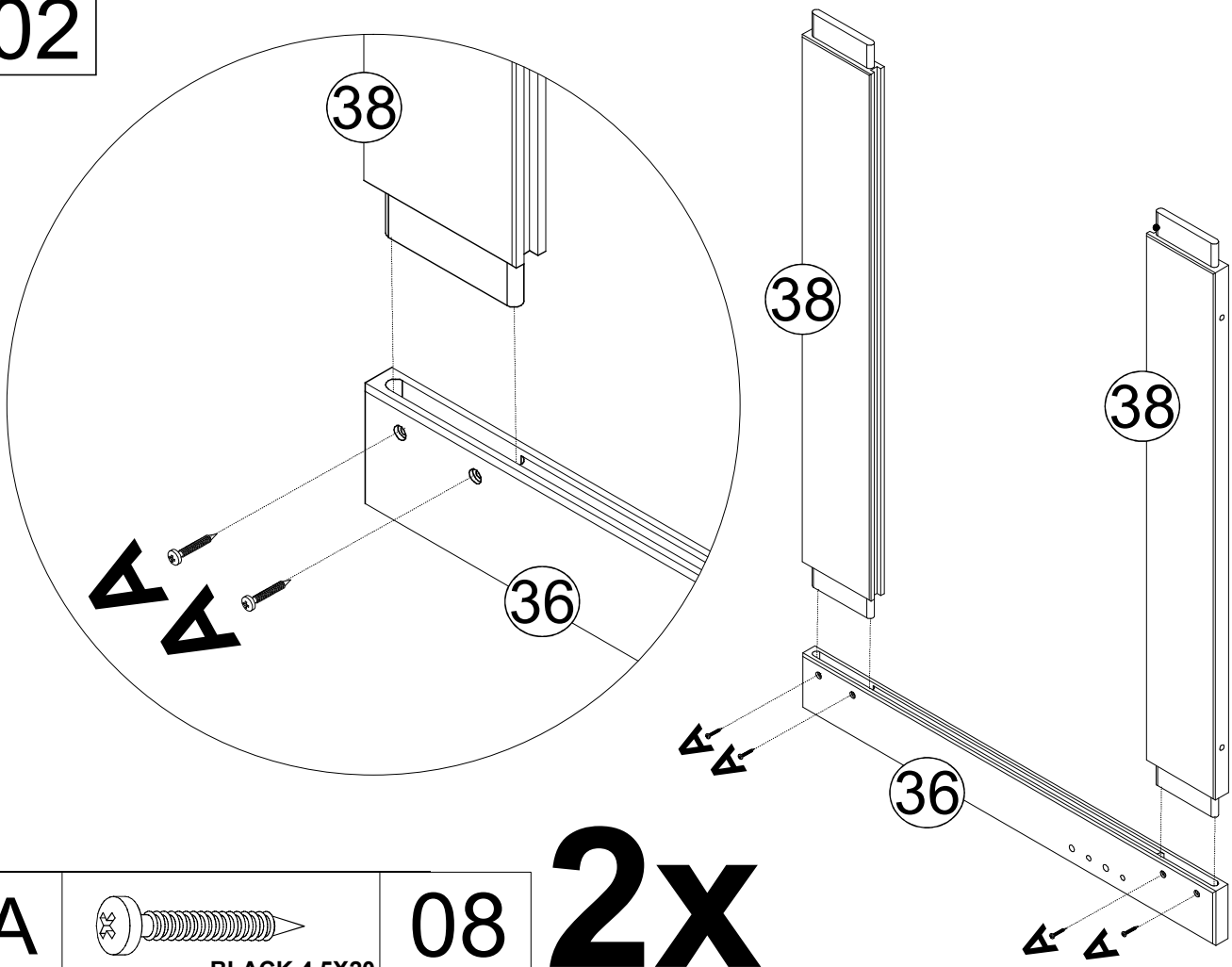

A	BLACK 4,5X20	08	2x

03

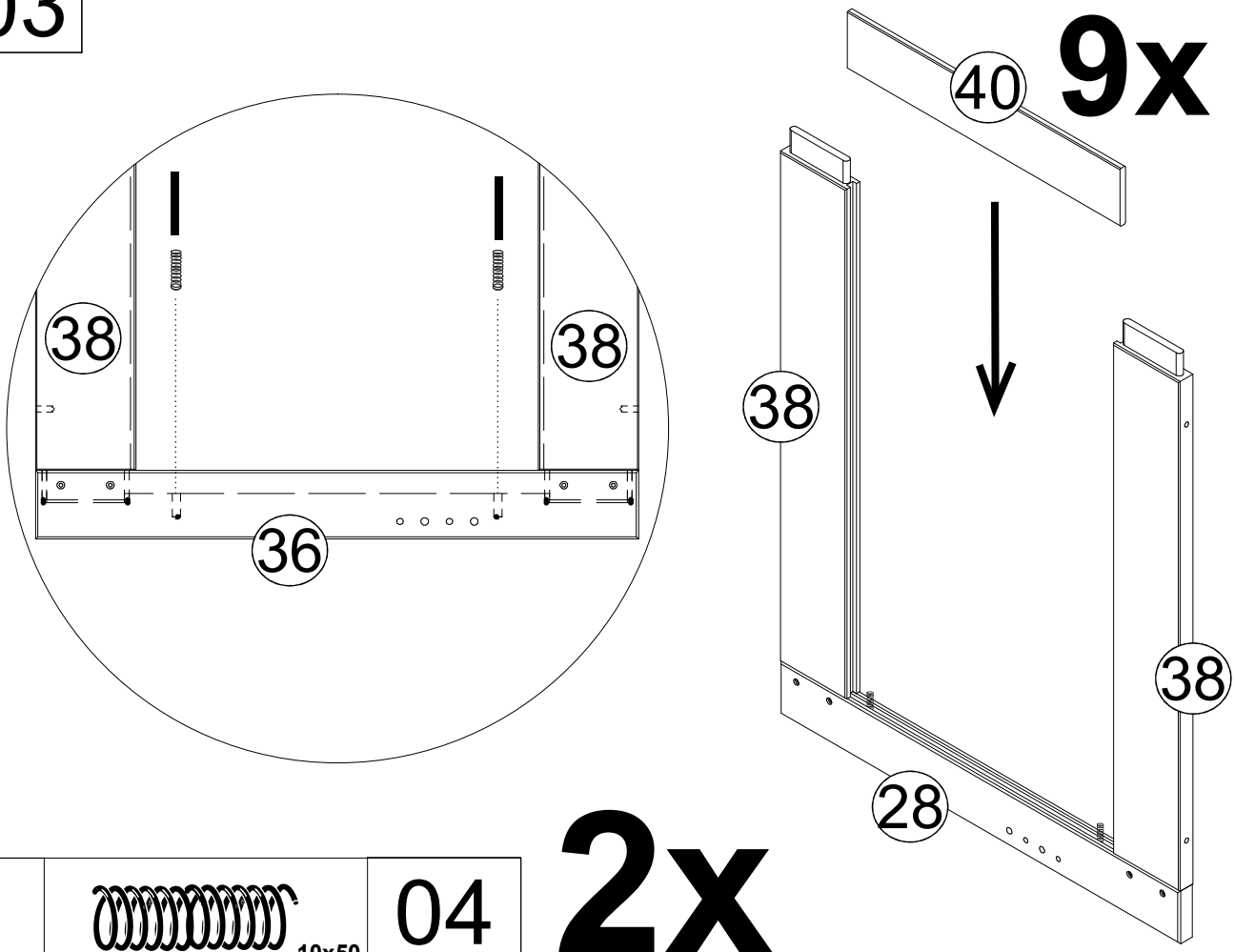

I	10x50	04	2x

04

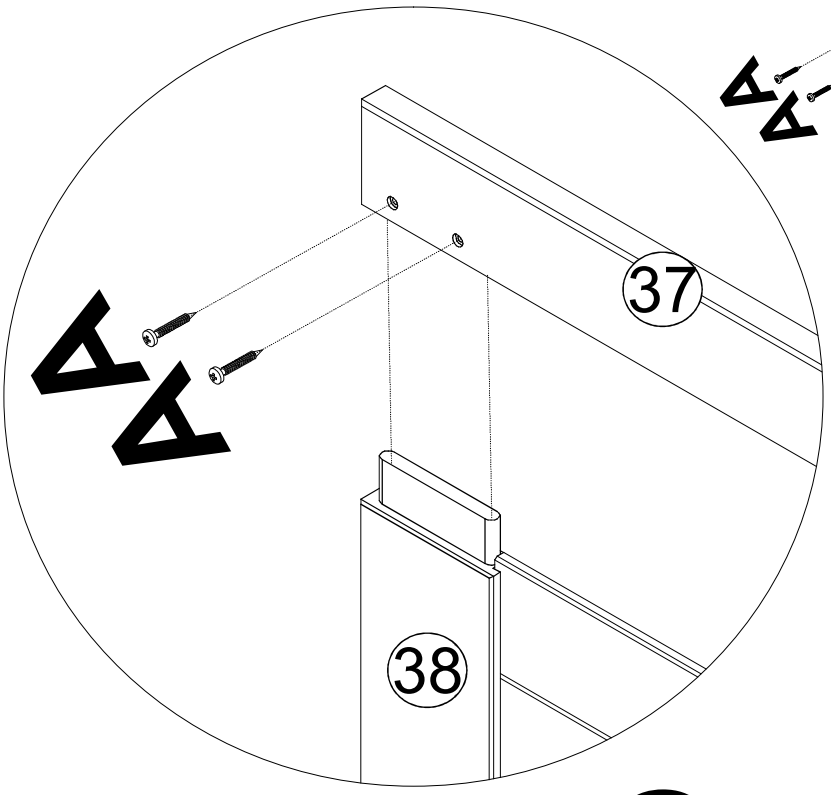

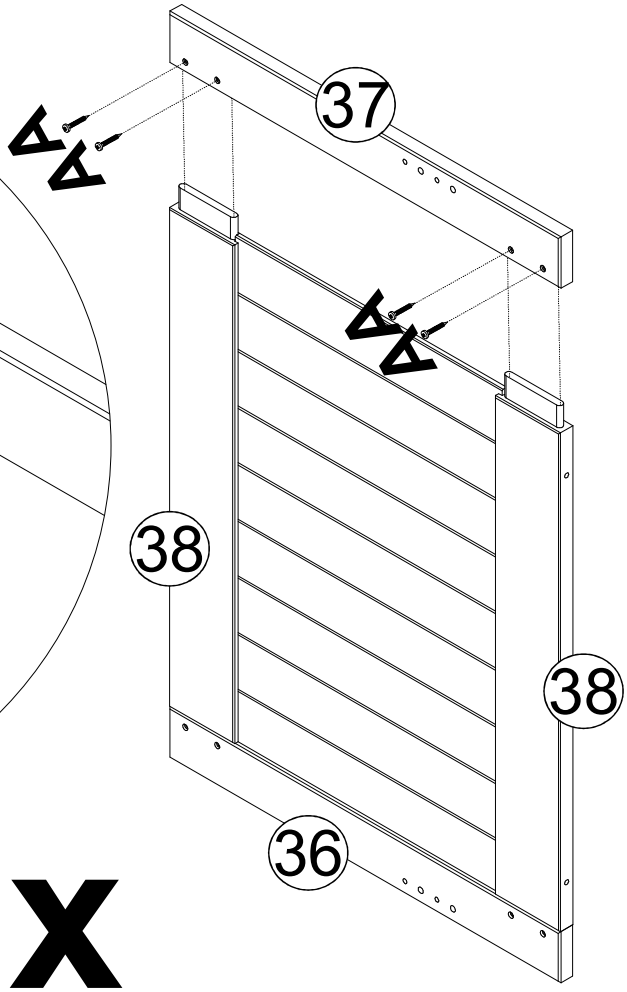

A	BLACK 4,5X20	08	2x

05

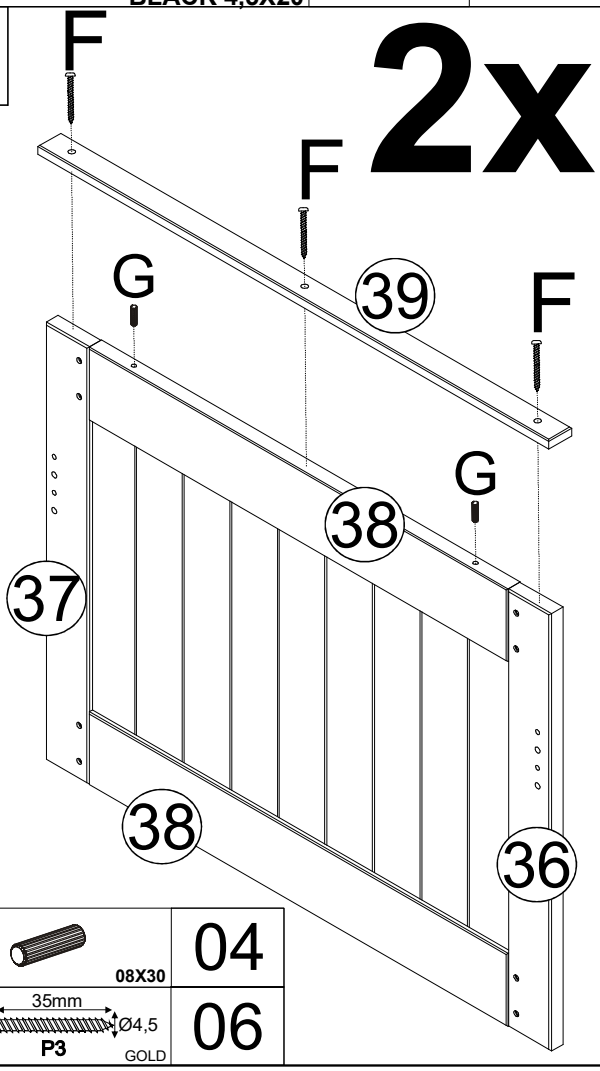

2x

06

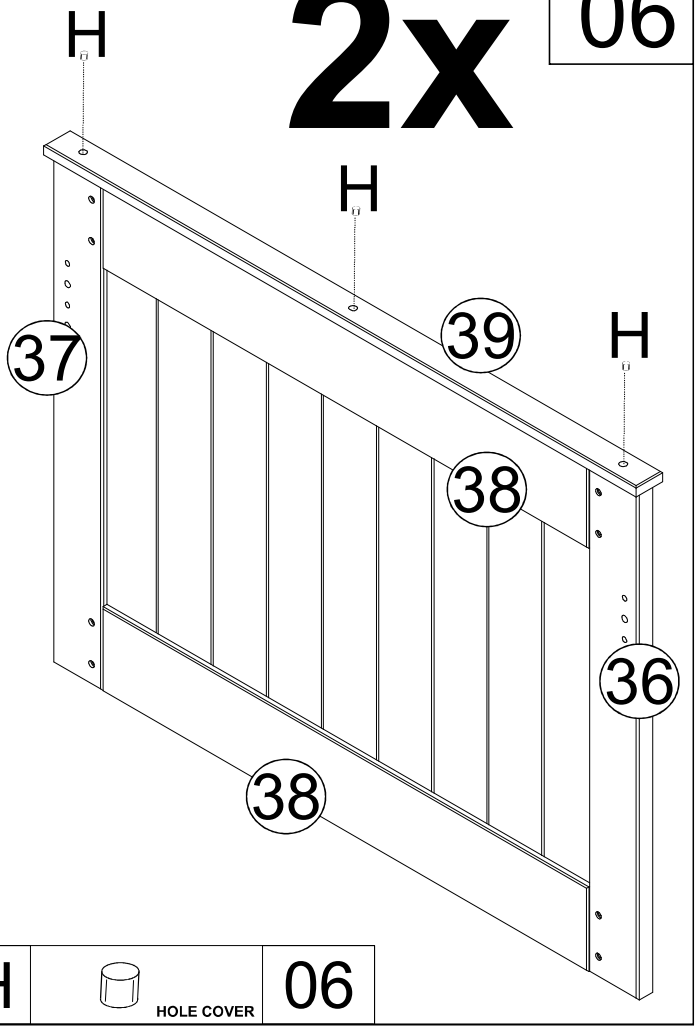

2x

G	08X30	04	
F	35mm, P3, Ø4,5, GOLD	06	
H	HOLE COVER	06	

07

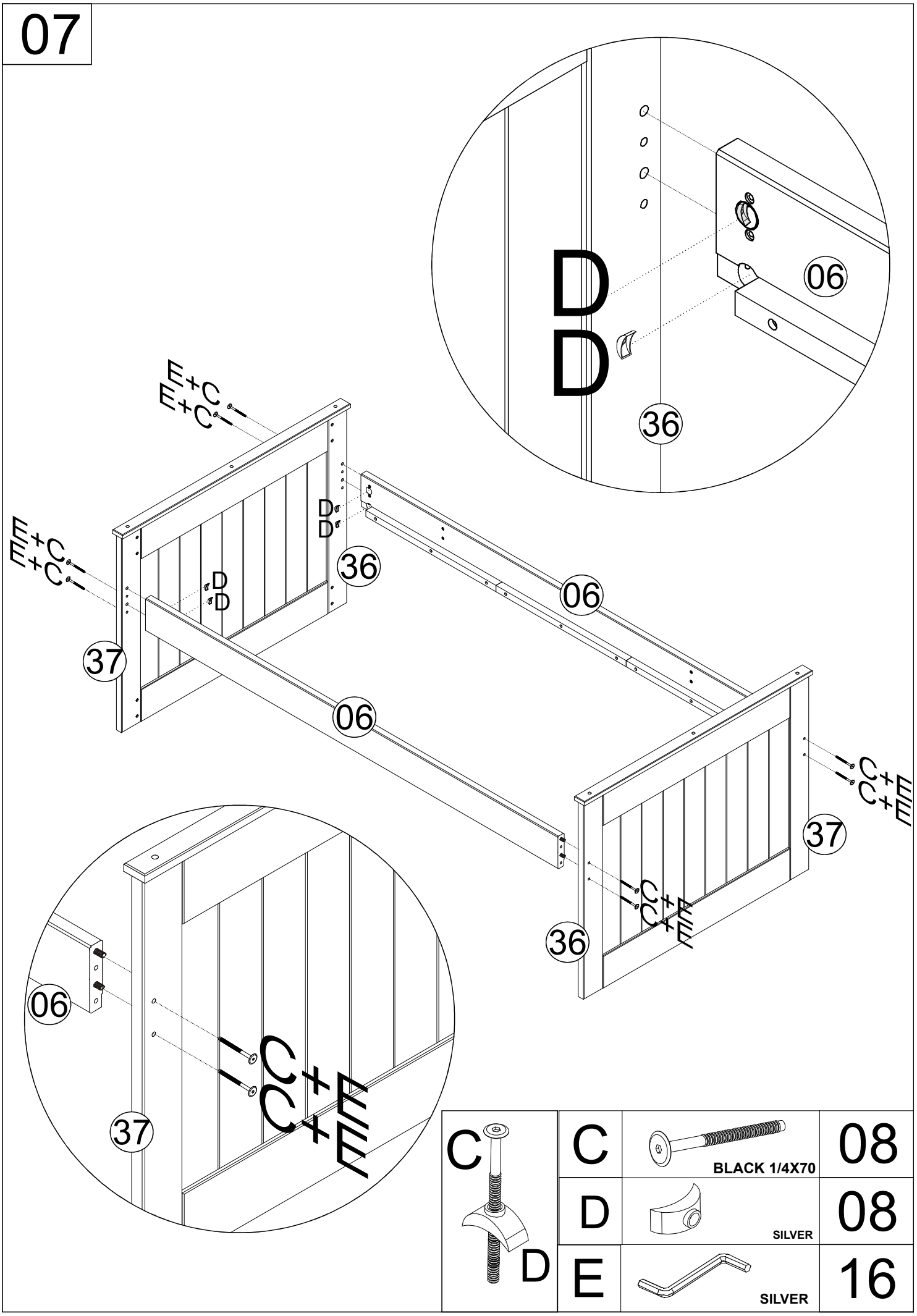
D
D
06
36
E+C
E+C
D
D
36
06
37
06
C+E
C+E
37
C+E
C+E
36
06
37
C+E
C+E
C
D
C
BLACK 1/4X70
08
D
SILVER
08
E
SILVER
16